NOTES:

1. All dimensions are in millimetres unless otherwise stated.
2. Attach 2 x 250 long off-cut rail pieces to the bottom of the post using four 100mm nails, to anchor it. Post to be secured with rubble and soil compacted, unless otherwise specified.
3. Length of post varies according to fence type.

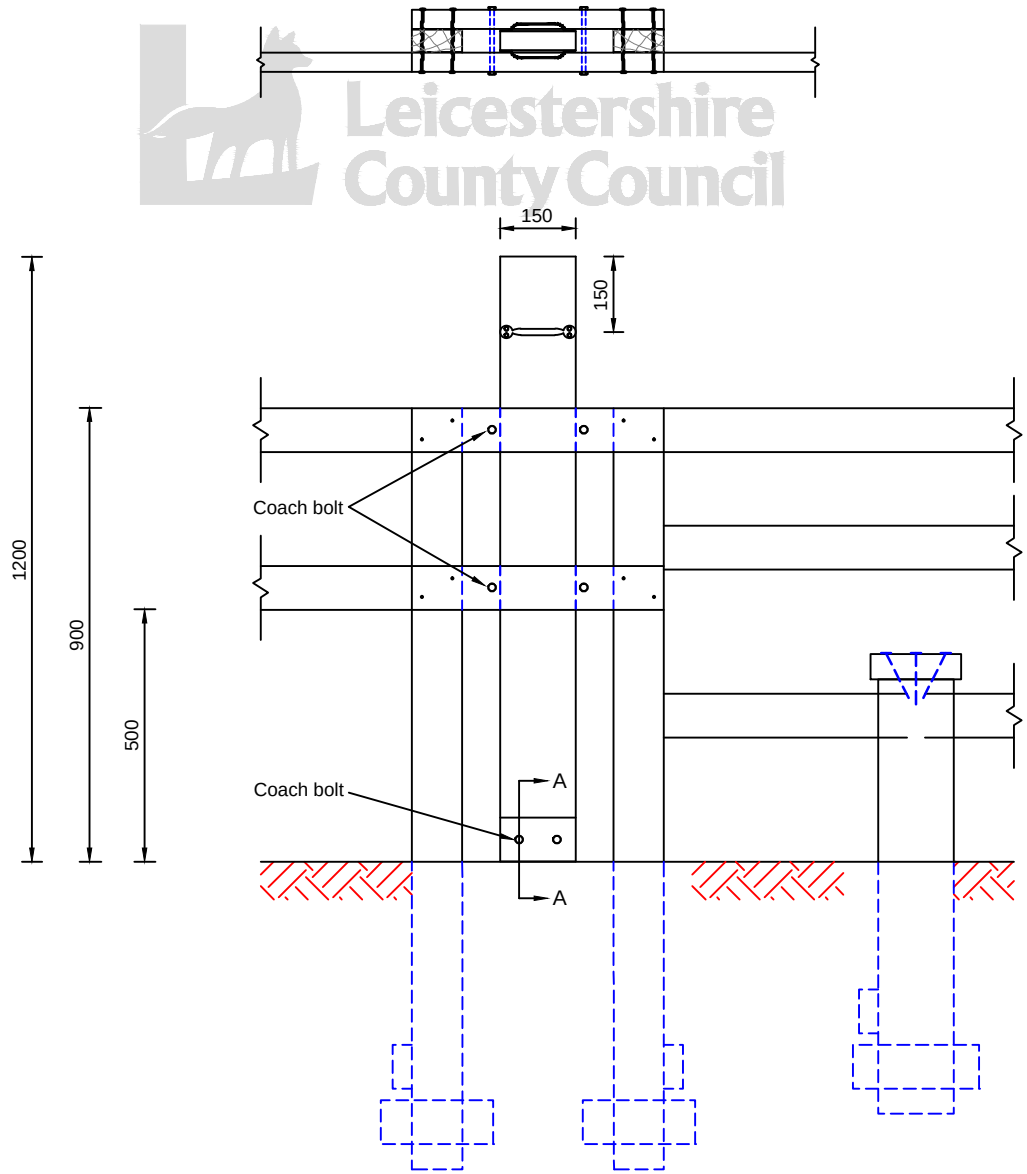

DESCRIPTION	DIMENSIONS	No
POSTS	100 x 45 x see Note 3	2
RAILS	38 x 87 x 509	3
PADDLE	150 x 38 x 1200	1
STOPS	150 x 38 x 87	2
COACH BOLTS	8mm dia	6
NAILS	100mm	16
HANDLE		2

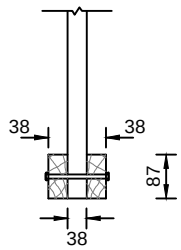

PART SECTION A-A

Leicestershire County Council

ENVIRONMENT AND TRANSPORT DEPARTMENT

TITLE:

STANDARD DRAWING — RIGHTS OF WAY

DOG-GATE

DRAWING NUMBER	DATE
SD/FP/9[A]	SEPTEMBER 2007
AUTOCAD REF	SCALE
K:\GENERAL\D9997STDDRG\	NOT TO SCALE

Rev	Date	Notes on Revision
A	MARCH 2015	Note 2 amended